Index Feed Drawing

Preparing to Draw: Basic Drawing and Dimensioning Skills, Identifying Measurements, and Mulitview Drawings

Below is a 3-D (Isometric) view of a part called "**INDEX FEED**". Study the drawing and mentally picture the object in 3-D in your head. Then picture the object orthographically. What does the front view look like, the right side view, the top view, etc.?

Draft the necessary views on the sheet given to you. Do not add dimensions.

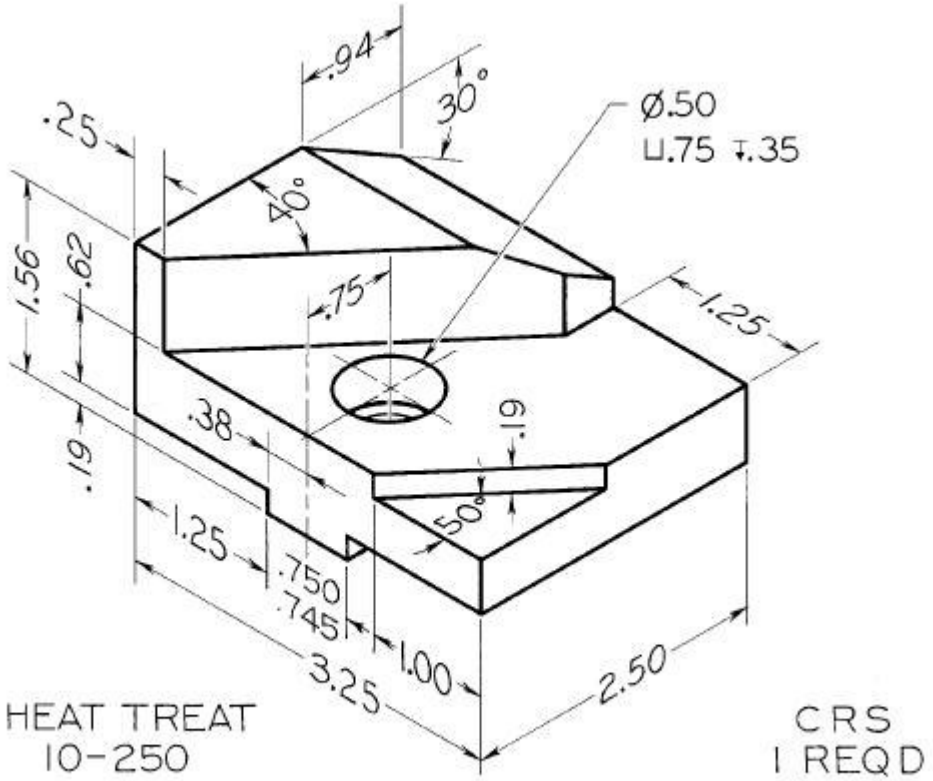

FIGURE 6.60 Index Feed.

You will be graded on the following….

- Properly Drawn Views
- Proper View Spacing
- Line Quality
- Line Weights
- Proper drawing measurements
- Lettering
- Title Block
- Overall Neatness
- Following of directions