Elements to include in your Site Analysis

Numerous elements go into a given site analysis. These elements include location, neighborhood context, site and zoning, legal elements, natural physical features, man-made features, circulation, utilities, sensory, human and cultural, and climate components. The following elements typically are considered in most sites:

Location: The site should be related to major streets or landmarks previously existing. Aerial photographs help in this assessment stage. There should be documentation of distances and time from major places. This should be completed by either driving or walking the distance first-hand.

Neighborhood Context : Zoning of the neighborhood is important and information of this type can typically be found at the municipal planning department of the site. Numerous issues at this stage require direct observation. Features of this sort include architectural patterns, street lighting, and condition of existing buildings. This would also include the immediate surroundings of the site. The reaction of the surrounding buildings towards the site and people moving around should be analyzed. Other important components of the neighborhood context include an analysis of existing paths (pedestrian, cyclist, and vehicle), landmarks and nodes. Landmarks are distinctive sites that provide way-finding for people in the area, and which define the character of a neighborhood. Nodes are key public gathering places that encourage people to linger and socialize.

How would your building fit in with the surrounding buildings?

Size and Zoning : Site boundaries can be located by either verifying the dimensions physically or contacting the county tax assessor's office. What is the shape of the site? Zoning classifications, set-backs, height restrictions, allowable site coverage, uses, and parking requirements are obtained by obtaining zoning classifications from a zoning map, which can be located from the city planning department.

Infrastructure, social, and political boundaries.

Legal : Typical legal information can be obtained from the deed to the property. The deed is held by the owner of the title insurance company. In this deed is information such as the property description, present ownership, and the governmental jurisdiction the site is located in, and the city or county.

Na**tural physical Features :** Most of this information will be derived from the topographic features on the site. A contour map of this magnitude can be located from the survey engineer. Drainage problems as well as existing natural features of trees, water, ground cover, ground texture, and soil conditions on the site should be directly observed.

Man Made Features : Features located on the site such as buildings, walls, fences, patios, plazas, bus stop shelters should be noted. The site and location of such features should be directly measured. Documentation of existing historical districts should be made, some of which may already have reports completed. Locating this information can be done through the municipal planning department for the site.

Circulation: The uses of streets, roads, alleys, sidewalks, and plazas are important in this inventory step. It is not necessarily an analysis of these elements but more an analysis of what occurs on these circulation gateways. Look at traffic and pedestrian traffic.

Utilities: Information for utilities concerning the site can be found through the utility departments and companies in the local area. Generally this company has a print of the drawing of this information needed. Information in this print includes the location of all utilities and their locations around or on the site itself.

Sensory: Much of the sensory information collected will be done through first-hand experience. This type of information is obtained from sketching and photographs (sometimes aerial photographs). Direct observation of other sensory elements of noise, odors, smoke, and pollutant areas must also be completed.

Human and cultural: This information can be obtained through census statistics on the neighborhood. Information regarding these statistics is available from the local municipal planning agency. This information includes activities among people on the site and their relationships to these activities.

Climate: This information can be obtained through the local weather service. Conditions such as rainfall, snowfall, humidity, and temperature over months must be considered and analyzed. The sun-path and vertical sun angles throughout an entire year are important to note. What direction is N,E, S,W.?

LANDSCAPING SYMBOLS

Landscape plans make use of ***symbols**** and words to indicate plants, buildings, and other items of information in the plans. Neatly constructed symbols that are drawn to scale present an accurate description of the landscape. Symbols used to feature landscape items should be kept simple as possible. They should, however, be suggestive of the actual appearance of the landscape features.

Examples of Landscape Symbols

a. Orientation Symbols

Arrows are generally used to indicate the direction of north on landscape plans. North is at the top of the sheet on many landscape plans. The north direction on the blueprint should be checked with a compass on the site. The direction of prevailing winds usually is symbolized by an arrow and words near the symbol for the north direction. (Fig. 1a)

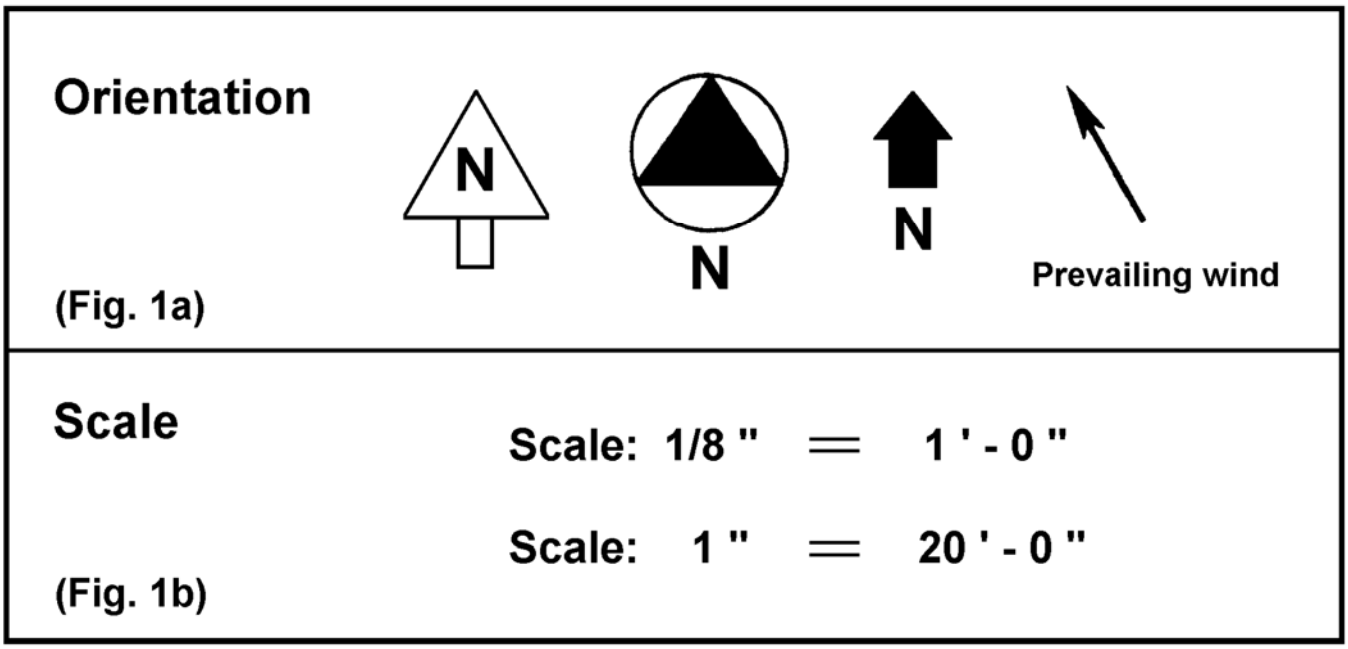

Figs. 1a & 1b - All landscape plans should have a symbol to indicate the north direction. The scale of measurement should also be shown.

b. Scale Symbols

The scale of measurement should be shown on the landscape plan. The scale indicates what a given distance on the blueprint would equal on the ground. For example: a scale of 1" = 20'- 0' means that one inch on the landscape plan is equal to twenty feet and zero inches on the ground. (Fig. 1b)

c. Boundary and Utility Symbols

Boundaries of the landscape site and other permanent features usually are indicated by solid or dashed lines. (Fig. 2a)

Utilities are represented by dotted lines for wires or pipes; letters to indicate telephone, electricity, sewer, water, or gas; and dots for utility poles. (Fig. 2b)

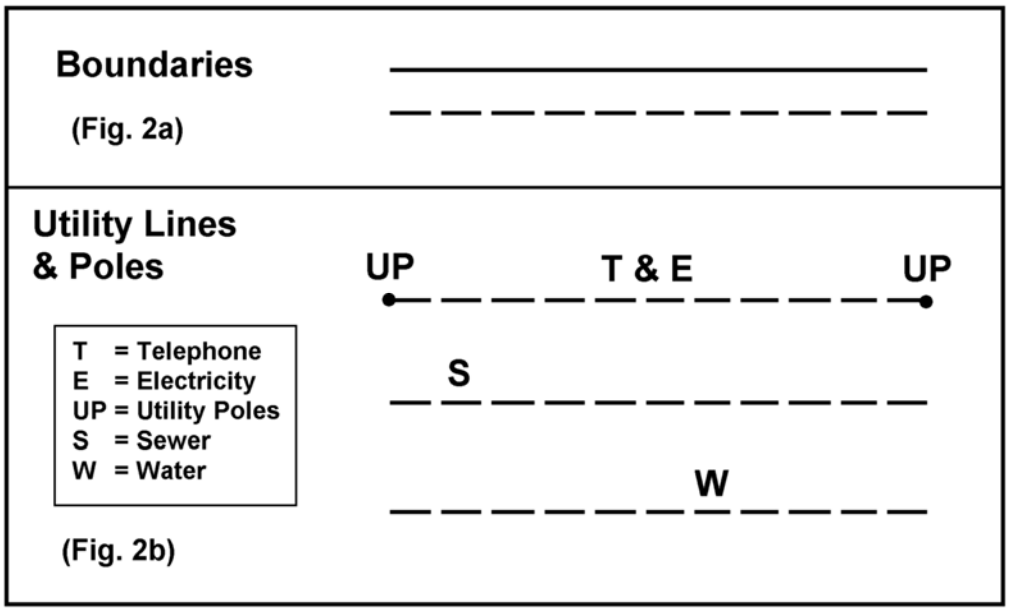

Figs. 2a & 2b - Boundaries are indicated by solid or dashed lines. Utility lines are represented by dashed lines and letters. Poles are shown by dots and letters.

d. Distance and Contour Line Symbols

Distance is indicated on a blueprint by a solid or dashed line with arrows indicating ending points. Numbers on or above the lines indicate the distance in feet, and sometimes in inches. (Fig. 3a)

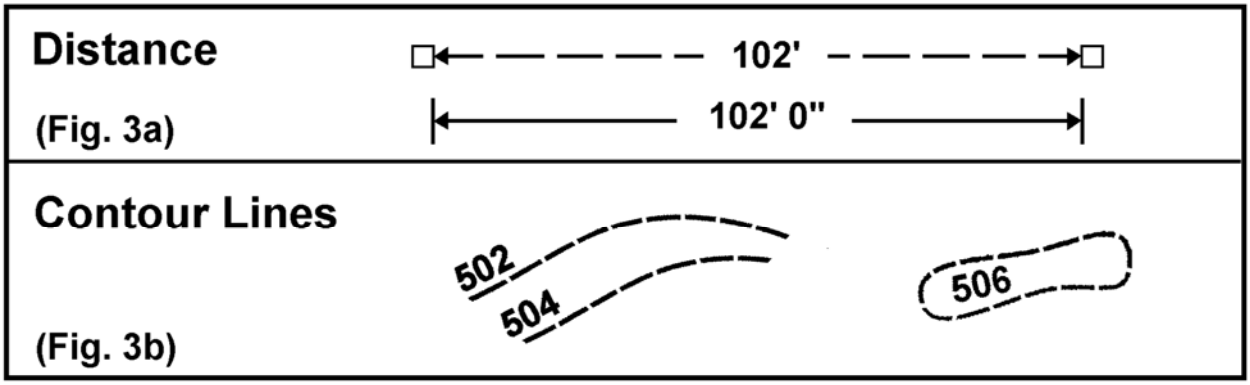

Figs. 3a & 3b - Distances are indicated by dashed or solid lines and numbers. Contour lines usually are not added to landscape plans.

Contour lines* are used to designate elevations above sea level or some other benchmark. All points on a contour line indicate the same elevation. Contour lines spaced closely together indicate steeper slopes than those spaced far apart. Contour lines that join together in a circular pattern indicate high spots or depressions. Landscape plans usually omit the use of contour lines to prevent cluttering the blueprint. If contour lines are needed, they can be drawn on a separate sheet. (Fig. 3b)

2. Paved Area Symbols

Paving can be indicated in several ways. Concrete walks, driveways, and play areas usually are indicated by solid lines for boundaries with "concrete" designated inside the boundaries. Other paving materials can be indicated by words or symbolized by ***patterns****. (Fig. 5)

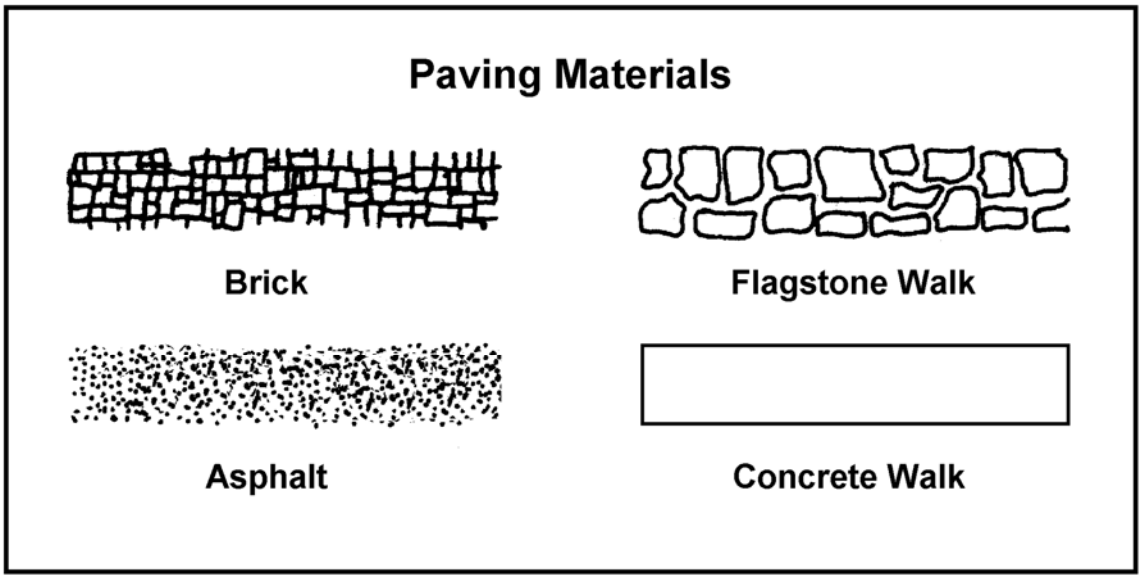

Fig. 5 - Paving materials can be symbolized by words or patterns.

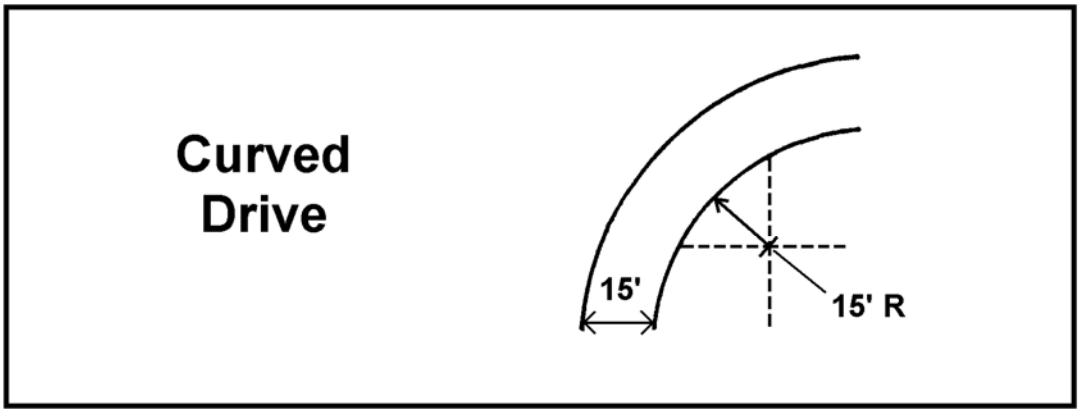

Fig. 7 - This curved drive is 15 feet wide with a 15 foot radius measured from the inside of the drive.

4. Curved Drive or Walk Symbol

Curves in walks or driveways are shown by two parallel lines. The width of the walk or drive is indicated between the two lines. The ***radius**** from the inside of the curved driveway is also shown. (Fig. 7)

5. Other Construction Symbols

Lawn features such as pools, grills, fences, and so forth can be indicated by simple outlines and words. (Fig. 8)

f. Plant Symbols

Trees, shrubs, and flower beds can be shown by plant symbols as shown below. (fig. 9)

Deciduous trees often are shown with dark spots representing trunks and curved lines indicating the extent of the tips of branches. Evergreen trees can be shown the same way, but with lines radiating from the trunk to the curved lines.

When two trees of the same species are touching, the space between them can be left open to indicate this feature.

Shrubs can be shown as dots with circular line patterns indicating the occupied space. Sheared hedges can be shown by straight line enclosures. Flower beds can be indicated by enclosing lines and words.

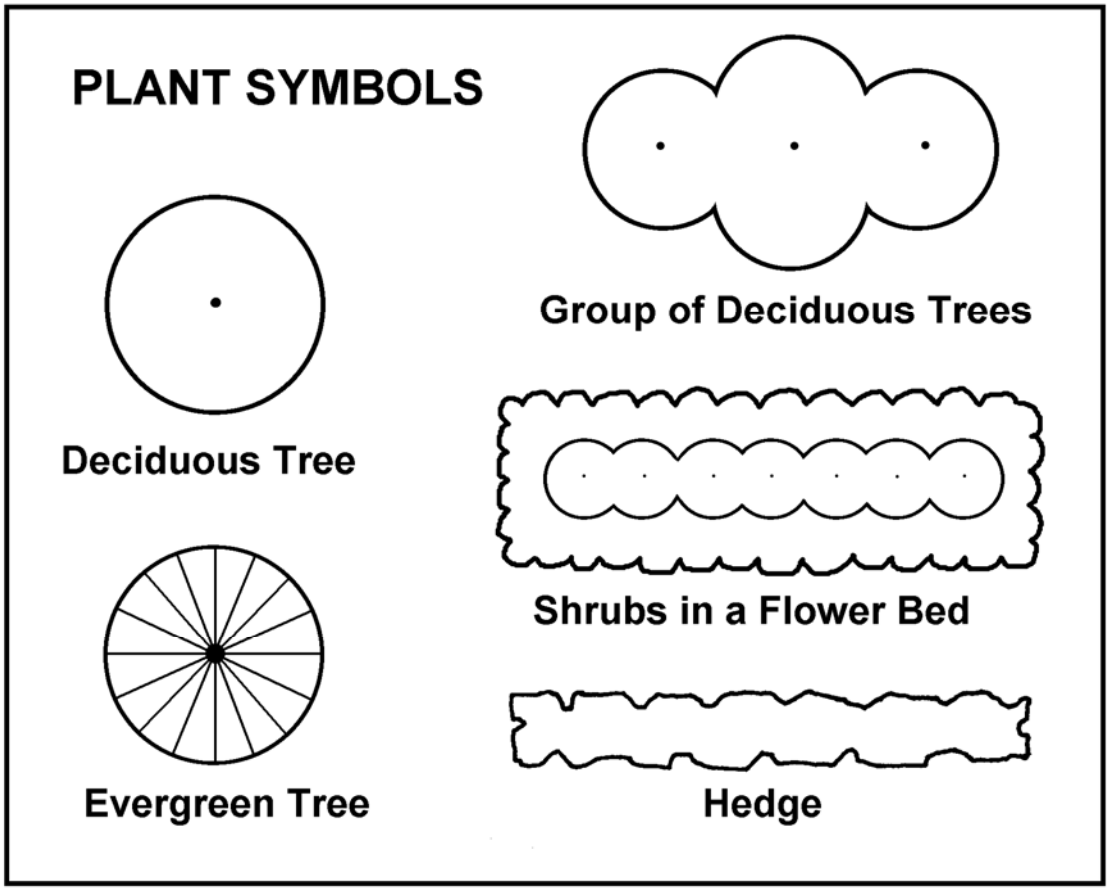

Fig. 9 - Various symbols can be used to show many kinds of plant forms.

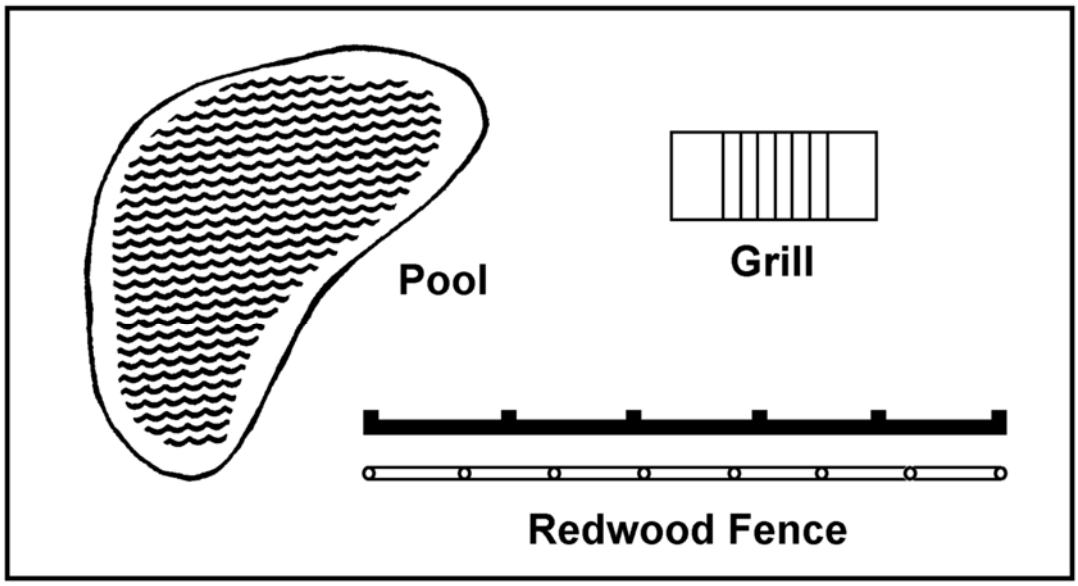

Fig. 8 - Simple outlines and words can be used to symbolize lawn features such as pools, grills, and fences.

Examples of Tree Symbols