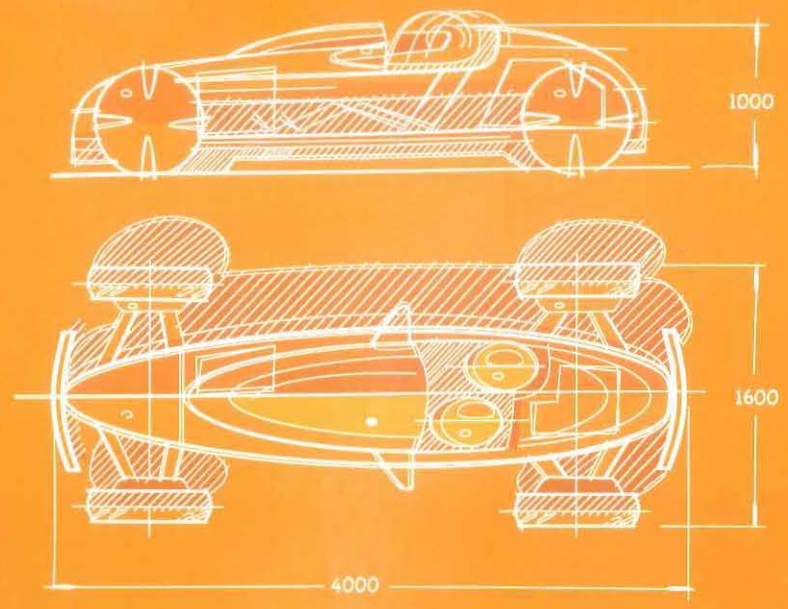

"You only get one chance to start a project, so make sure to explore every possibility right away. Never start a project with the answers – just questions."

PACKAGE IDEATION | 03

INTRODUCTION TO PACKAGE IDEATION

The main objective for package ideation is to study as many system configurations as possible in a short period of time. The process is similar to design ideation where each concept is sketched out loosely on paper and evaluated as a cluster of ideas.

After setting the functional objectives, there is a small window of opportunity in the product development process to be innovative with the vehicle architecture. This window often closes quickly due to project time constraints, so ideas need to be free-flowing and clearly communicated.

It is easy to jump to conclusions and rely on paradigms that have been applied on previous projects and walk backwards into the future. So make good use of this phase of the project and don't hold back, once you're deeper into a program there may not be an opportunity to return to this phase. Don't worry if some of the ideas are bad; what appears to be a dumb idea during brainstorming can often lead to the development of a really good one later.

First look at the basic proportions (as shown on the opposite page) and think about what may drive them.

Next, configure some of the key elements—i.e., the occupants, cargo, tires and powertrain—and look for opportunities. Look at the big chunks and see how they can be reconfigured to work more effectively. The powertrain, for example, often provides great opportunity for innovation and will greatly affect the proportions. The occupant package and cargo storage is also an area where there is great potential for fresh thinking because they take up more space than the other elements.

Although this phase requires a broad focus, do not totally overlook small details. Often a minor innovation may be the key to a successful package.

Look closely at the functional objectives to select and place each element. Next look at the body structure, closures (doors, gates, hood & trunk) and breathing apertures to see how these may affect the overall proportions and design. Also look at the interior design possibilities. Seating and telematic concepts may have a great impact on the overall architecture.

The example project on the following pages illustrate how you may go about this process. The word picture created for this example is "An Aspirational Commuter Car." This statement communicates both the physical and emotional aspects of the theme. It sums up the vehicle and customer in just a few words, but also creates an open brief.

From this heading, specific objectives or targets for the concept need to be developed. Look at the subjects on p. 49. Think about the three entities involved in the product development: the customer, the manufacturer and the market environment. Choose several of these to help steer the design. Some of these are simple, like top speed, fuel consumption, and the number of passengers. Other factors like manufacturing strategies and international legislation will be more complex subjects, but should be given consideration. Try to think about how each objective may affect the basic architecture. Requirements for passengers, ground clearance, a large engine, heavy cargo, and doors will have an impact even on a loose ideation sketch. Other less influential features like lighting, instruments and trim may be ignored at this time unless there is a specific focus on these systems.

As a commuter vehicle it will probably be small, inexpensive to buy and drive, easy to park, carry only one, two or three people, and have limited cargo capacity. It may be sold all over the world and therefore be manufactured in very high volumes. To be aspirational, the styling will be important and performance may need to be stepped up.

OPEN WHEEL - LOW, LONG

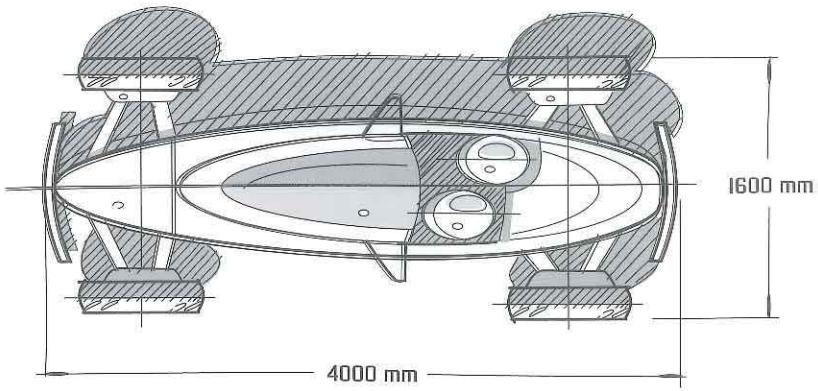

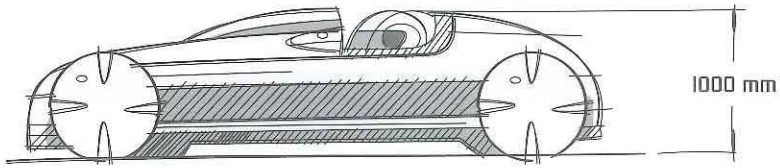

LOOSE EXTERIOR PROPORTION SKETCHES

Keep the sketches very simple; at this stage they are just to look at basic proportions. These three options look at various ways to approach the Aspirational Commuter Car.

The low car will probably be performance oriented to make it aspirational. The short vehicle will be more practical and easier to park and maneuver. The narrow concept will be able to cut through traffic and be very easy to park.

At this stage set some size limitations based on the known environmental requirements. For example, to park sideways, the length of the short car will need to be similar to the width of a large truck. To cut through traffic, the ultra-narrow concept will need to be the width of a large motorcycle.

TWO BOX - TALL, SHORT

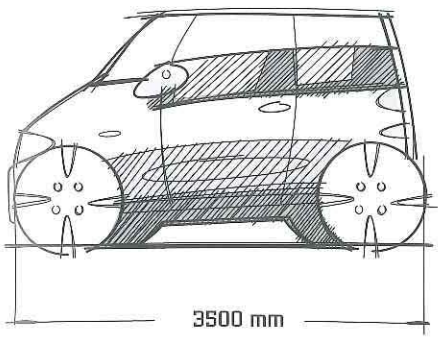

ONE BOX - TALL, SHORT

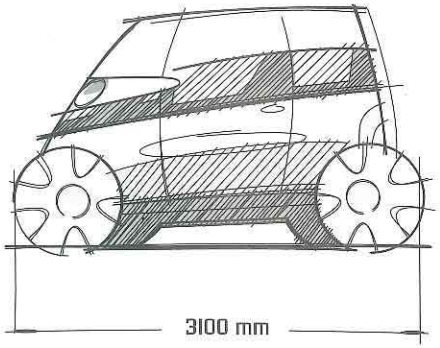

ULTRA-NARROW

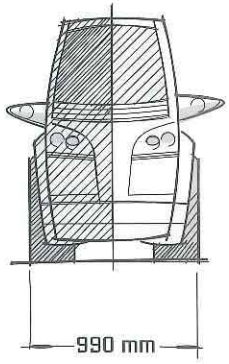

NARROW

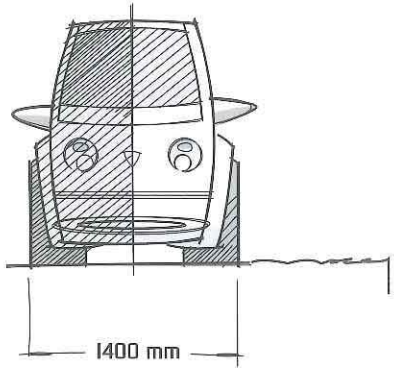

PACKAGE IDEATION PROCESS

Sketch several layouts with the occupants, cargo, tires and powertrain. At this stage, don't include other elements in the package unless the design brief specifically requires a focus on other areas. Also, do not worry too much about scale. Accuracy is not important here. This will be addressed at the next phase of the process.

The main objective is to get as many ideas down on paper, quickly, so that you can think about how the exterior proportions will be influenced by the major elements. For example, when thinking about the powertrain, just look at whether it is large or small, at the front or the back, longitudinal or transverse, electric or internal combustion, FWD or RWD.

Configure the package in as many different ways as possible and exhaust all of the possibilities. Try to make sure all of the ideas meet the functional objectives and target specifications. Each sketch should only take 5 to 10 minutes to draw, so it should be possible to create many ideas in a short time period.

Looking at the example concept sketches, the brief for this project didn't specify how many passengers need to be carried, so the ideation work looks at layouts with one, two and three occupants. The study also looks at the different types of passengers. Knowing that a commuter car will need to be small and inexpensive the powertrain options are limited and only very efficient package configurations are given consideration.

Don't underestimate the magic that comes from drawing out your ideas. In the same way that a new design may develop as it is rendered, sketching out the architecture will often foster new concepts that would never have been conceived had they not been part of the ideation process. This is a problem for many engineers who simply never sketch their ideas on paper.

TARGET SPECIFICATIONS

Top Speed	75 mph
0-60mph	7 Seconds
Cost	$9,000 - $12,000
Fuel Consumption	60mpg or Equiv.
Range	40 - 60 miles
Safety	5 Star Crash (IIHS & NCAP)

TWO PASSENGERS

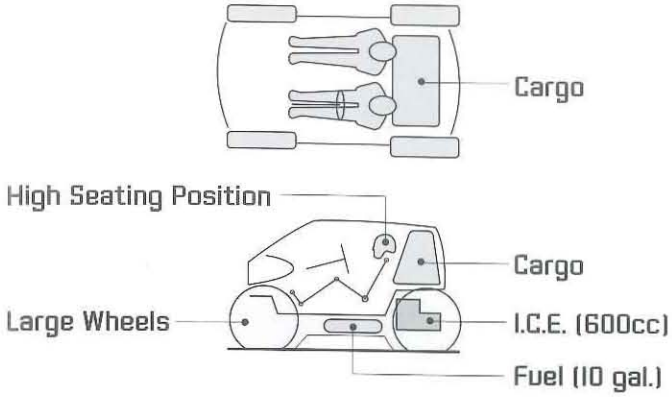

THREE PASSENGERS (1 ADULT + 2 KIDS)

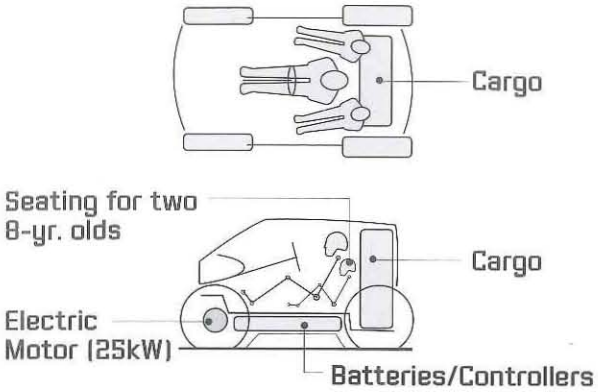

TWO PASSENGERS + CARGO TRAILER

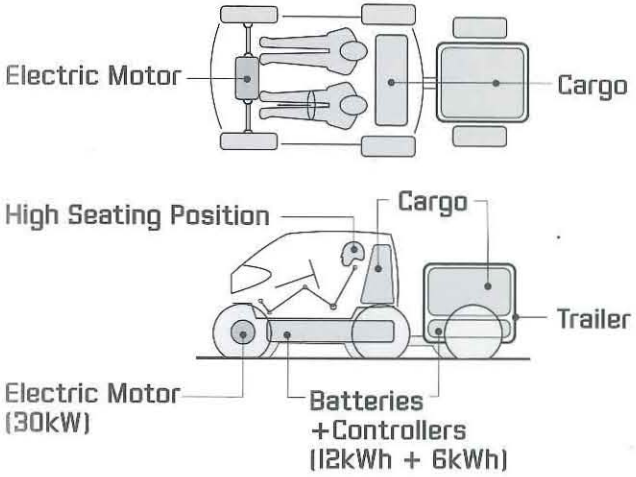

THREE PASSENGERS

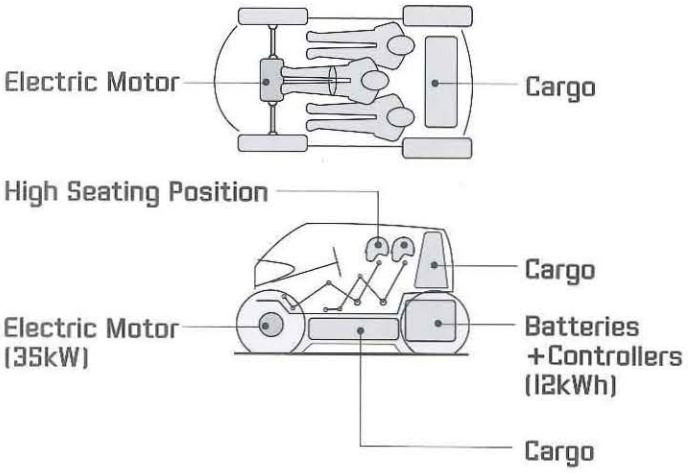

As you work through this process, continue research into the major elements of the package.

Consider the seating position for the occupants. Think about the number of passengers, how they will relate to each other, their orientation and approximate location. Also, set up their height from the ground and posture. Make notes on the drawing as you go.

The powertrain specification should be estimated from the target performance goals and approximate weight of the car. Also look at which wheels will drive.

The cargo requirements should be set out in the functional objectives. If specific items need to be carried, get the measurements and include these in the sketches.

If the wheel size or locations are important, add information about diameters, wheelbase, track, etc.

Loosely sketch a body profile over each package to look at the proportional difference between each study.

ONE PASSENGER

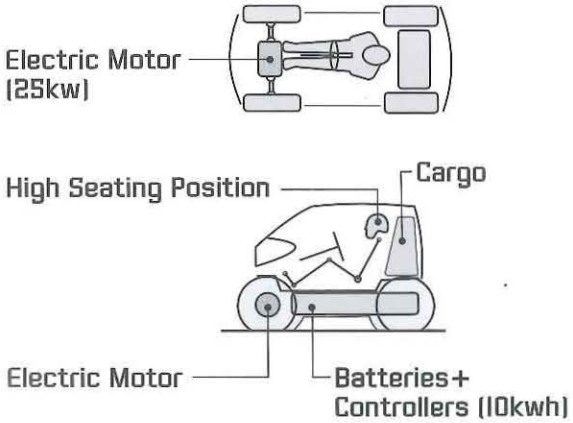

TWO PASSENGERS (TANDEM)

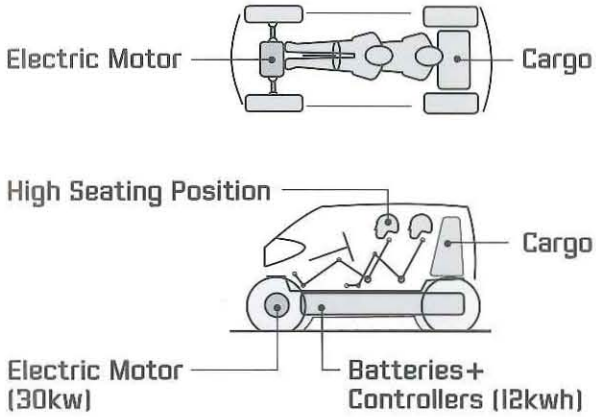

ONE PASSENGER FWD

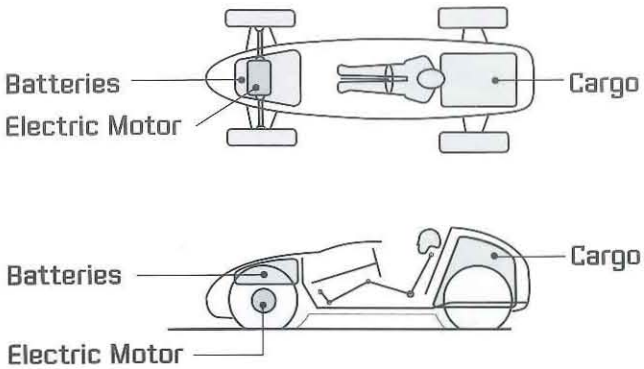

TWO PASSENGERS

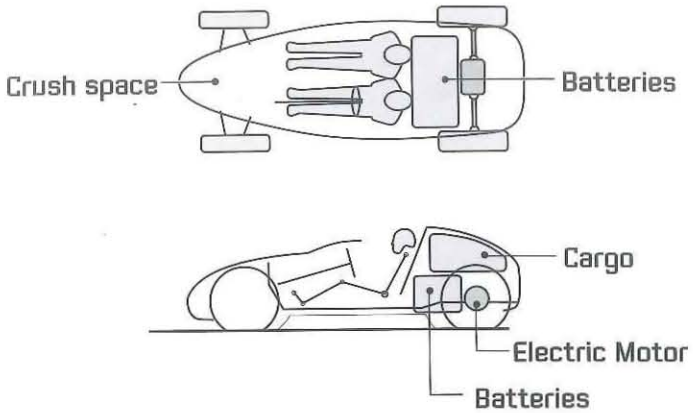

ONE PASSENGER RWD

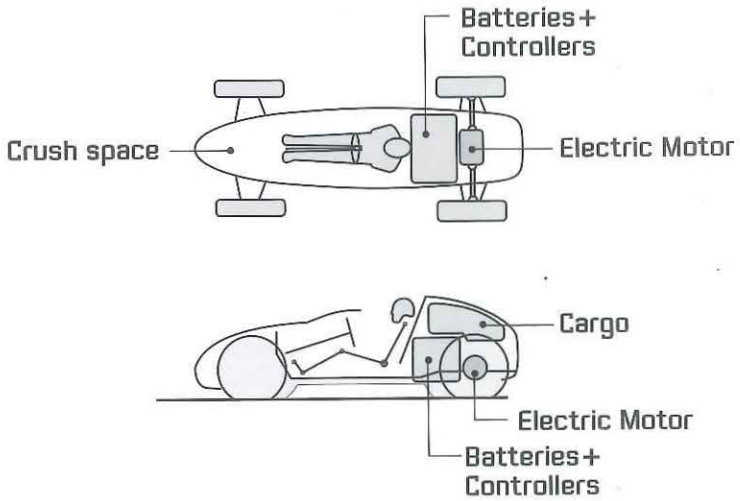

TWO PASSENGERS (STAGGERED)

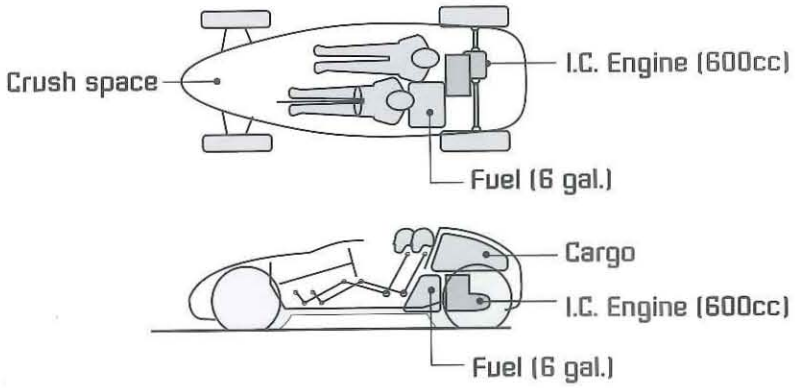

COMPOSITE MICRO-BODY CONCEPT

Sketch the body structure, apertures and closures. Look at various ways to open the doors and configure the body. Think about how the main load bearing structural elements may be configured. Consider the materials and possible manufacturing methods that may affect the package.

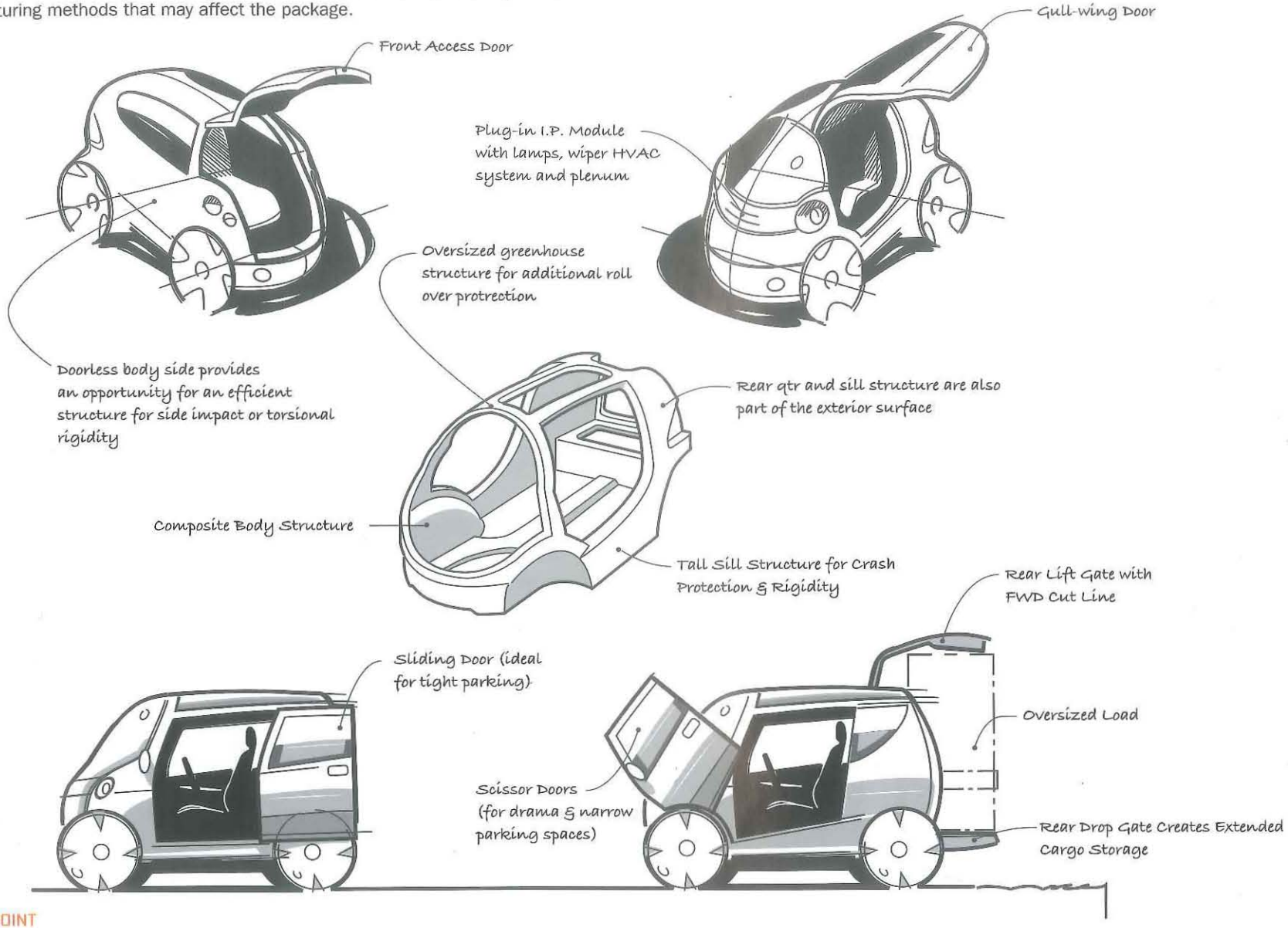

FIVE-PIECE ULTRALIGHT BODY CONCEPT

This is a great time to look at unorthodox body structures and manufacturing processes. These will have a dramatic effect on the package and need to be thought through before laying out the other components. Notice in this example how the suspension and powertrain influence or help the body design.